CHAPTER I. INTRODUCTION

The basic objective of ion exchange (IX) as a pretreatment process at the Los Banos Demonstration Desalting Facility was to remove calcium ions from the feedwater and thereby reduce calcium sulfate and calcium carbonate scaling tendencies within the reverse-osmosis (RO) and electrodialysis (EDR) desalting units. The unique feature of the Los Banos IX system which was tested was the use of reject desalting brine for regeneration of the resin. Conventional IX systems regenerate resin using sodium chloride brine.

IX for calcium removal is commonly referred to as softening, and the IX process consists of passing hard water through the resin bed of an ion exchanger. In the bed, hardness components (calcium, magnesium, and other divalent cations) are removed from solution and replaced by sodium ions. In practice, the exchange rate is so rapid that most water can be easily and completely softened at normal flowrates regardless of hardness. The IX process removes both calcium and magnesium ions, although magnesium ion removal is not necessary for RO pretreatment.

The IX process uses synthetic resins as carriers for the exchange of sodium ions and divalent cations. Such resins, with their high exchange capacities and controllable properties, make large-scale IX both practical and feasible. Some exchange resins have a high affinity for a particular ion, while others do not. Commercial resins are broadly classified as strong acid, weak acid, strong base, and weak base. Several combinations of the various cation- and anion-exchange resins can be used to demineralize water through the removal of both cations and anions. Strong-acid cationic resins are best for treating water with high total electrolyte levels.

Other conditions being equal, adequate contact during both regeneration and softening phases of the IX process is the most important requisite in successful cation-exchange water softening. Other important factors include hardness of the process water, chemical composition of the regenerant brine, depth of resin in the column, sufficient flowrates, and composition of the exchanger (resin). In addition, if continued maximum contact is to be secured, reasonably clear water must be applied to the exchanger to prevent colloidal or suspended matter from fouling the exchanger's surface.

Besides softening water, the IX process removes varying amounts of multivalent cations -- including barium, strontium, iron, and manganese. Even an IX unit whose softening capacity is exhausted will continue to remove these potentially troublesome ions from water. Periodic special flushing and regeneration procedures are required to remove iron and manganese from IX resins.

IX resins are confined in vessels where flows of water and regenerants are accurately controlled. Softening equipment is designed to operate with either pressure or gravity flows. Pressure vessels for softeners are made of steel or fiberglass, while gravity softeners are generally made of concrete or steel. Gravity softeners are usually used where a large water capacity is required; they are similar to gravity filters in that they can be readily inspected and maintained. The pressure softeners generally operate downflow, while gravity units commonly operate either downflow or upflow. Large municipal water-softening plants use gravity-flow softeners.

IX operations are classified as concurrent (conventional) or counter-current. Concurrent operation is when regeneration and service flows occur through the IX column in the same direction. In counter-current operation, flows for service and regeneration occur in opposite directions. Both operations usually use sodium chloride brine for regeneration. Operations at the Los Banos facility tested counter-current operation with upflow regeneration using RO reject brine as the regenerant. Sodium chloride brine was used in bench-unit testing and during the initial startup operations of the main units.

A perceived advantage of using RO reject brine instead of sodium chloride brine is reduction of the amounts of water and sodium chloride salt required for regeneration. In addition, RO reject brine can be used more than once since the amount of new regenerant available per cycle is fixed by the amount of water produced in the service mode and concentrated as reject by the desalting process. Figure 1 shows a simplified flow schematic for the IX process with RO brine regeneration.

There are several other advantages of using RO brine in the counter-current upflow regeneration process. For one, the fully exhausted resin containing the highest concentration of absorbed calcium ion is atop the resin bed. When calcium breakthrough occurs at the bottom of the bed, upflow regeneration minimizes the average depth of bed through which the eluting calcium ions must pass. This, in turn, minimizes the average contact time between the resin and the portion of eluting regenerant containing the highest levels of supersaturated calcium sulfate. In addition, if the regeneration flowrate is sufficient, the supersaturated spent regenerant is removed from the column before scaling of the resin occurs. Furthermore, due to the upward flow, the bed becomes fluidized and allows any recently formed calcium sulfate precipitate to be removed easily.

Another advantage of counter-current flow operation is that effluent from the column during service consists of water in equilibrium with the most fully regenerated resin at the bottom of the bed. This fact results in lower calcium leakage than with the concurrent flow operation.

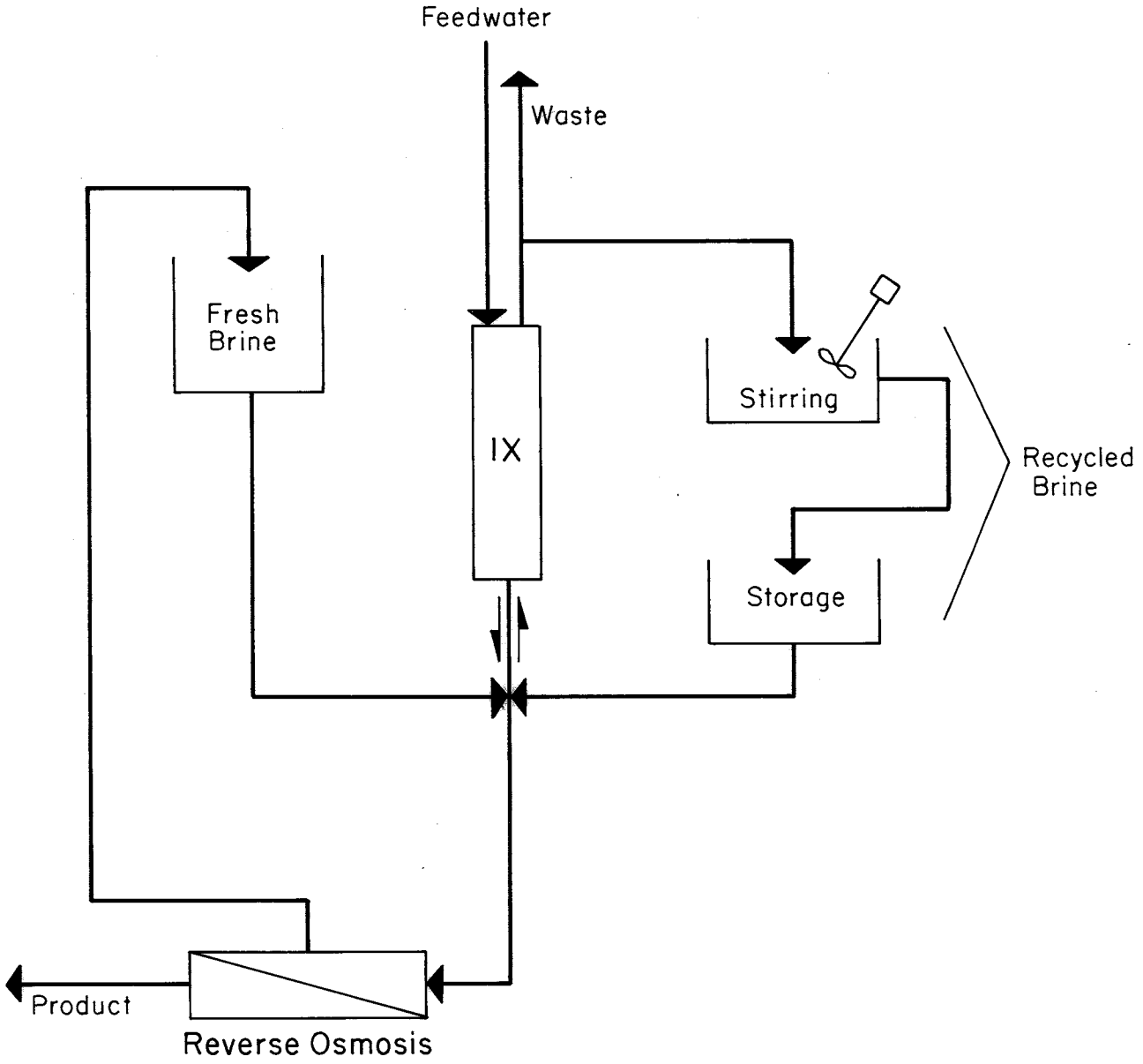

Figure I. Simplified Flow Schematic for Ion Exchange Process with Reverse Osmosis Brine Regeneration

CHAPTER II. REQUIREMENTS

IX softening was the final pretreatment process prior to desalting of agricultural drainage water by RO. The base study for the Los Banos project projected the quality of the San Luis Drain water to be around 6,000 total dissolved solids (TDS), but the drain remained at 9,000 TDS for the duration of the project. Design of the RO system was based on IX effluent of the design 6,000-TDS water, but RO membrane manufacturers provided requirements for water at 150-percent design quality. Typical constituent concentration of the San Luis Drain water and the recommended RO influent requirements at 150-percent design water quality are shown in Table 1.

TABLE 1

SAN LUIS DRAIN WATER QUALITY AND
RECOMMENDED REVERSE-OSMOSIS INFLUENT REQUIREMENTS
(mg/L)

Chemical Component	San Luis Drain Water Quality (3-13-85)	Recommended RO Influent Requirements*
Calcium (Ca)	514	15.0
Magnesium (Mg)	268	6.0
Sodium (Na)	1,990	3,150
Iron (Fe)	0.02	0.01
Potassium (K)	5.6	6.0
Manganese (Mn)	0.25	0.01
Ammonium (NH_4)	0.05	--
Bicarbonate (HCO_3)	168.4	172.5
Sulfate (SO_4)	4,280	2,073
Chloride (Cl)	1,380	2,073
Nitrate (NO_3)	190	138
Boron (B)	15	22.5
Silica (SiO_2)	8.6	18.0
Total dissolved solids	9,220	9,261

*Based on 90-percent fresh water recovery and 150-percent design water quality.

The IX process is primarily concerned with removing calcium ions to prevent calcium sulfate from scaling RO membranes. The RO system can be operated at higher calcium concentrations than those listed in Table 1 with use of a threshold inhibitor or operation at a lower fresh water (permeate) recovery rate.